FIELDQUIP®
AG & TURF



RETAIL PRICE LIST

EFFECTIVE - 1ST MARCH 2026

FIELDQUIP AG & TURF SPEARHEAD MAJOR

FIELDQUIP®
AG & TURF

GLOBAL INNOVATION.
LOCAL EXPERTISE.

THE SMART CHOICE FOR PROFESSIONAL TURF MANAGEMENT.

Headquartered in Oakey, Queensland, Fieldquip Ag & Turf is part of the global Alamo Group, a world leader in the design and manufacture of professional agricultural and turf equipment.

We proudly supply and support a diverse range of premium implements across Australia and New Zealand, combining international innovation with local expertise. Our portfolio includes slashing and mowing equipment from 1 to 8 metres wide, along with flail mowers, reach mowers, remote-control mowers, pasture toppers, finishing mowers, and an extensive fine turf range sourced from our trusted international partners.

Since beginning in 2004, Fieldquip Ag & Turf has continued to grow and evolve, driven by a commitment to quality, reliability and customer satisfaction. As part of the Alamo Group since 2014, we are proud to connect our customers with world-class equipment from leading manufacturers in the UK, USA, Germany and beyond, all backed by local service and support they can depend on.

MISSION

To provide reliable, high-quality implements that deliver exceptional value and exceed the expectations of tractor owners, operators and turf professionals throughout Australia and New Zealand.

VISION

For every tractor owner and turf professional in Australia and New Zealand to be the proud owner of at least one Fieldquip implement.

WE TAKE RESPONSIBILITY FOR QUALITY

Quality is at the core of everything we do. From design and sourcing to delivery and support, we are committed to providing durable, high-performing equipment that meets the needs of professionals in the field. Every member of our team takes pride in the quality of their work.

WE DELIVER CUSTOMER SATISFACTION

Our customers are the reason we exist. We listen, we adapt and we deliver, ensuring every product and service reflects our commitment to reliability, affordability and long-term value.

WE PROVIDE LEADERSHIP AS A COMPANY AND AS INDIVIDUALS

Our leadership is built on innovation, experience and collaboration. We value initiative and teamwork, empowering our people to make decisions that improve performance, strengthen relationships and drive continuous improvement.

WE ACT WITH INTEGRITY IN ALL WE DO

Honesty, fairness and respect guide every aspect of our business. We honour our commitments and take responsibility for our actions with customers, suppliers, our team and the broader community.

WE VALUE FIELDQUIP AG & TURF PEOPLE

Our people are our foundation. We foster a culture of respect, trust and opportunity, encouraging growth, learning and collaboration across every part of the business.

WE CONSIDER OUR SUPPLIERS AS VITAL TEAM MEMBERS

Our suppliers are integral to our success. We believe in clear communication, mutual respect and fair partnerships that deliver consistent quality and long-term value for our customers.






CONTENTS

SINGLE ROTOR SLASHERS 2

MULTI SPINDLE SLASHERS/MULCHERS 6

FLEX WING SLASHERS 9

MULTI DECK FINISHING MOWERS 17

PASTURE TOPPERS 18

FINISHING MOWERS 20

FLAIL COLLECTORS 24

VERGE MOWERS 26

OUTFRONT FLAIL MOWERS 27

POST HOLE DIGGERS 28

TILLERS 29

CULTIVATORS 30

GRADER BLADES 31

IMPLEMENTS 32

FIELDQUIP

SABRE SERIES SLASHERS

SABRE Offsettable Rotary Slashers, a Fieldquip Ag & Turf range, the SABRE series delivers robust, compact slashers for small to mid-range tractors, ideal for pasture topping, property maintenance and general farm work. Built for durability, each model features a galvanised deck, reliable driveline protection and essential safety features.

MODELS & TRACTOR SUITABILITY:

SBR12-1500C / SBR15-500C: 18–40 HP tractors *(40 HP gearbox)*

SBR18-500C: 30–50 HP tractors *(50 HP gearbox)*

KEY FEATURES:

- Offsettable design for efficient edge and fence-line cutting
- 5 mm galvanised deck for corrosion resistance and long service life
- Category I linkage with floating top link
- Adjustable skids for consistent cutting height
- 540 RPM PTO, friction clutch fitted *(overrun clutch optional)*
- Front and rear chain guards for safety
- Gearbox colour options: red or yellow *(Please specify when ordering)*.



Model No.	Overall Width	Working Width	Weight	Tractor HP (Min.)	RRP ex GST	RRP inc GST
SBR1200C	1.2m	1.1m (3'6")	180kg	18	AU$3,133	**AU$3,446**
SBR1500C	1.5m	1.4m (4'6")	250kg	20	AU$3,443	**AU$3,788**
SBR1800C	1.87m	1.8m (6')	295kg	30	AU$4,570	**AU$5,027**

Optional Extras

PART No.	DESCRIPTION	RRP ex GST	RRP inc GST
B9164	Combination Friction and Overrun Clutch	AU$443	**AU$488**
AN105	50 HP Gearbox Upgrade (50 HP standard on SBR1800C)	AU$530	**AU$583**
SBR-WHKT	Wheelkit (adjustable) Suitable for all Sabre Models	AU$713	**AU$784**



Photos may contain optional extras. Prices and specifications may change without notice.

FIELDQUIP

LE SERIES SLASHERS

The Fieldquip Ag & Turf LE Series is a robust, offsettable rotary slasher designed for reliable performance across a wide range of agricultural applications. Featuring an efficient edge and fence-line cutting capability, it is ideal for pasture maintenance, paddock topping and general farm work, offering a strong and dependable build for 30–75 HP tractors.

TRACTOR SUITABILITY:

Suits 30–75 HP tractors *(75 HP gearbox)*

KEY FEATURES:



- Offsettable design for efficient edge and fence-line cutting
- 5 mm galvanised deck for strength and corrosion resistance
- Category I & II linkage
- Pivoting headstock with chain backstays for stability
- Adjustable skids for consistent cutting height
- 540 RPM PTO, friction clutch fitted *(overrun clutch optional)*
- Front and rear chain guards for operator safety
- Gearbox colour options: red or yellow *(please specify when ordering)*

Model No.	Working Width	Weight	Tractor HP (Min.)	RRP ex GST	RRP inc GST
LE60C	1.5m (5')	350kg	40	AU$5,972	**AU$6,569**
LE70C	1.8m (6')	420kg	45	AU$6,432	**AU$7,075**
LE80C	2.0m (6'8")	500kg	50	AU$8,041	**AU$8,845**

Optional Extras

PART No.	DESCRIPTION	RRP ex GST	RRP inc GST
B7250	Combination Friction and Overrun Clutch	AU$655	**AU$720**
WHA-600	Wheelkit (adjustable) Suitable for LE/XLE60	AU$1,247	**AU$1,371**
WHA-610	Wheelkit (adjustable) Suitable for LE/XLE70	AU$1,247	**AU$1,371**
WHA-620	Wheelkit (adjustable) Suitable for LE/XLE80	AU$1,247	**AU$1,371**



Photos may contain optional extras. Prices and specifications may change without notice.

FIELDQUIP

XLE SERIES SLASHERS

The Fieldquip Ag & Turf XLE Series is a heavy-duty, offsettable galvanised rotary slasher engineered for demanding agricultural conditions. Built for strength, durability and consistent performance, it delivers efficient edge and fence-line cutting while standing up to tougher workloads. Ideal for pasture maintenance, paddock topping and general farm applications, the XLE Series features a strong build and upgraded gearbox suited to larger tractors.

TRACTOR SUITABILITY:

Suits 60–100 HP tractors *(100 HP gearbox)*

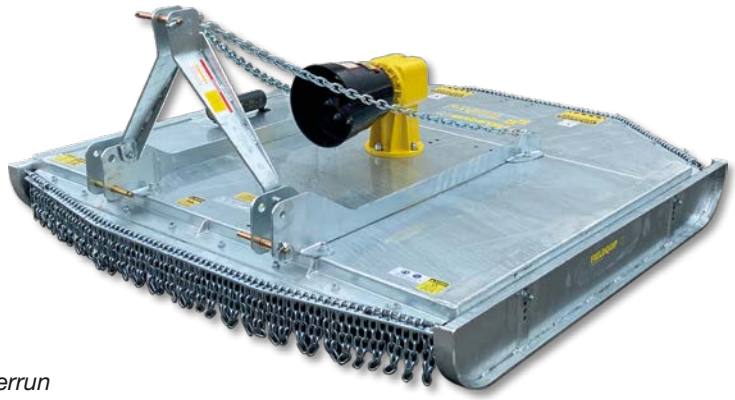

KEY FEATURES:

- Offsettable design for efficient edge and fence-line cutting
- 5 mm galvanised deck for superior strength and corrosion resistance
- Category I & II linkage
- Pivoting headstock with chain backstays for added stability under load
- Adjustable skids for consistent cutting height
- 540 RPM PTO, heavy-duty friction clutch fitted *(overrun clutch optional)*
- Front and rear chain guards for operator safety
- Gearbox colour options: red or yellow *(please specify when ordering)*

Model No.	Working Width	Weight	Tractor HP (Min.)	RRP ex GST	RRP inc GST
XLE60-920C	1.5m (5')	360kg	60	AU$6,469	**AU$7,115**
XLE70-920C	1.8m (6')	430kg	60	AU$7,017	**AU$7,719**
XLE80-920C	2.0m (6'8")	510kg	60	AU$8,663	**AU$9,529**

Optional Extras

PART No.	DESCRIPTION	RRP ex GST	RRP inc GST
WHA-600	Wheelkit (adjustable) Suitable for LE/XLE60	AU$1,247	**AU$1,371**
WHA-610	Wheelkit (adjustable) Suitable for LE/XLE70	AU$1,247	**AU$1,371**
WHA-620	Wheelkit (adjustable) Suitable for LE/XLE80	AU$1,247	**AU$1,371**



Photos may contain optional extras. Prices and specifications may change without notice.

FIELDQUIP

XHD SERIES SLASHERS

The Fieldquip Ag & Turf XHD Series is a heavy-duty galvinised rotary slasher built for high-horsepower tractors and demanding applications. Designed for contractors and large-scale operations, it delivers strength, durability and reliable cutting performance in tough conditions.

MODELS & TRACTOR SUITABILITY:

XHD72C: 50-150 HP Tractors *(150 HP gearbox)*

XHD84C: 70-150 HP Tractors *(150 HP gearbox)*

KEY FEATURES:



- 150HP Gearbox with Friction Clutch
- Heavy-duty monocoque pressed galvanised 6mm deck plate
- 540 RPM PTO driveshaft
- Pivoting headstock with chain backstays
- Adjustable height, high-clearance skids
- Heavy-duty spring steel blade carrier
- Heavy-duty swing-back lift blades
- Front and rear chain guards
- Gearbox colour options: red or yellow *(Please specify when ordering)*
- XHD72C comes standard with one adjustable height castor wheel
- XHD84C comes standard with two adjustable height castor wheels

Model No.	Working Width	Weight	Tractor HP (Min.)	RRP ex GST	RRP inc GST
XHD72C	1.8m (6')	700kg	50	AU$14,499	**AU$15,949**
XHD84C	2.15m (7')	880kg	70	AU$17,499	**AU$19,249**

Optional Extras

PART No.	DESCRIPTION	RRP ex GST	RRP inc GST
RL-001	Rear Lights	AU$552	**AU$607**
TM-TB600	Tool Box	AU$1,474	**AU$1,622**
XHD-WHKT	Additional wheel kit for XHD72	AU$1,536	**AU$1,690**
XHD-SR	Sign Rack (complete with 4 signs)	AU$2,220	**AU$2,442**



Photos may contain optional extras. Prices and specifications may change without notice.

FIELDQUIP

GEARMOWER SERIES SLASHERS

The Fieldquip Gearmower Series Slashers are heavy-duty, three-rotor gear drive rear discharge machines engineered for demanding agricultural and contracting conditions. Built for strength, durability and high-output performance, they deliver smooth, efficient power transfer across all three rotors for consistent results in heavy grass and crop residue applications.

Designed for broadacre pasture management, large-scale topping and commercial slashing, the Gearmower Series features reinforced monocoque deck construction and heavy-duty driveline components suited to higher horsepower tractors.

MODELS & TRACTOR SUITABILITY:

GM30-900: Suits 75 HP to 150 HP+

GM36-900: Suits 100 HP to 150 HP+

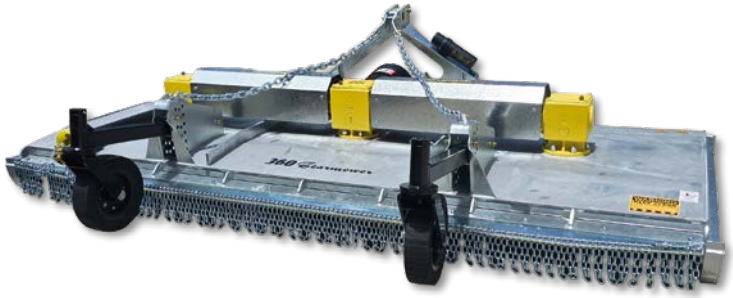

KEY FEATURES:

- Gear drive rear discharge design
- Heavy-duty monocoque pressed deck – 6 mm *(GM30-900) / 8 mm (GM36-900)*
- Category II & III linkage with pivoting headstock and chain backstays
- 540 RPM PTO driveshaft with multi-plate asbestos-free brass impregnated friction clutch
- Extra heavy-duty spring steel laminated blade carrier with swing-back heat-treated lift blades
- Adjustable high-clearance skids and twin heavy-duty adjustable height rear castor wheels
- Clean body lines to minimise grass build-up
- Front and rear chain guards for operator safety
- Gearbox colour options: red or yellow *(please specify when ordering)*
- Proudly manufactured locally in Oakey, Queensland.

Model No.	Working Width	Weight	Tractor HP (Min.)	RRP ex GST	RRP inc GST
GM30-950	3.0m (10')	1280kg	75	AU$31,006	**AU$34,107**
GM36-950	3.6m (12')	1430kg	100	AU$33,200	**AU$36,520**

Optional Extras

PART No.	DESCRIPTION	RRP ex GST	RRP inc GST
30369MK	Mulching Kit Option – Standard blade carrier, double-stacked, fitted with 2 stepped blades and 2 straight blades per rotor	AU$1,081	**AU$1,189**
AN99307	1000 RPM PTO driveshaft upgrade	AU$1,619	**AU$1,781**



Photos may contain optional extras. Prices and specifications may change without notice.

MAJOR CYCLONE MOWER WITH WHEELS

The Major Cyclone Mower with Wheels is a heavy-duty rotary slasher/mulcher designed for the toughest environments. Developed through extensive farm trials, it combines durability, reliability, and efficiency with reduced power consumption and maintenance compared with traditional flail mowers.

Its patented 'blender' double-chop blade system requires 25% less HP than a flail mower, slashing at least 25% off upfront fuel costs. Built with Strenx™ 700 MC steel and Hardox® 450 undersole discs, and fully hot-dip galvanised, the Cyclone is tough enough for heavy scrub, stubble management, cover crops, and maintaining field margins.

APPLICATIONS:

Airfields, waterways, crop residue, firebreaks, grass seed production, scrub, orchards, pasture & paddocks



KEY FEATURES:

- Save 25% on power and fuel costs compared to a flail mower
- Low maintenance, fewer wearing parts than a flail mower
- High forward speeds, even cut distribution
- Unique blade system for maximum mulching and shredding
- Even distribution of cut material
- Multi-purpose mower; ideal for heavy scrub, stubble management, cover crops and maintaining field margins for farm biodiversity

The Major Cyclone is the mower of choice for efficient, reliable, and high-performance mulching.

Model No.	Description	Working Width	Weight	HP (Min.)	RRP ex GST	RRP inc GST
MJ30-420WRW	Cyclone Rotary Mower 4.2m Std with 4 rear wheel kit - No roller 540 PTO	4.20m (13' 9")	1360kg	100	CALL FOR CLEARANCE PRICING 1800 454 150	
MJ30-560WRW	Cyclone Rotary Mower 5.6m Std with 4 rear wheel kit - No roller 540 PTO	5.60m (18' 4")	1680kg	110	CALL FOR CLEARANCE PRICING 1800 454 150	
MJ30-630WRW	Cyclone Rotary Mower 6.3m Std with 4 rear wheel kit, 2 front wheel kit - No roller. 1000 PTO	6.30m (20' 8")	1875kg	140	CALL FOR CLEARANCE PRICING 1800 454 150	
MJ30-720WRW	Cyclone Rotary Mower 7.2m Std with 4 rear wheel kit, 2 front wheel kit - No roller. 1000 PTO	7.20m (23' 8")	2235kg	150	DISCONTINUED	
MJ30-920WRW	Cyclone Rotary Mower 9.2m Std with 4 rear wheel kit, 2 front wheel kit - No roller. 1000 PTO	9.20m (30')	3100kg	180	DISCONTINUED	



Photos may contain optional extras. Prices and specifications may change without notice.

MAJOR CYCLONE MOWER WITH REAR ROLLER

The Major Cyclone with Rear Roller is a heavy-duty rotary mulcher designed for demanding agricultural and land management applications. Its patented 'blender' double-chop blade system requires up to 25% less horsepower than a flail mower, reducing fuel use while delivering a fine, evenly distributed mulch.

Built from Strenx™ 700 MC structural steel with Hardox® 450 undersole discs and fully hot-dip galvanised, the Cyclone is engineered for long service life in tough conditions. The full-length rear roller ensures consistent cutting height and an even finish across varied terrain.

APPLICATIONS:

Pasture topping, crop residue, cover crops, scrub, orchards, waterways and field margin management.



KEY FEATURES:

- Patented double-chop mulching system
- Up to 25% lower power and fuel use vs flail mowers
- Even material distribution with no windrowing
- Low maintenance with fewer wearing parts
- Heavy-duty rear roller

Model No.	Description	Working Width	Weight	HP (Min.)	RRP ex GST	RRP inc GST
MJ31-200	Cyclone Rotary Mower 2.0m Std with rear roller - No wheel kit. 540 PTO	2.00m (6' 5")	600kg	50	CALL FOR CLEARANCE PRICING 1800 454 150	
MJ31-250	Cyclone Rotary Mower 2.5m Std with rear roller - No wheel kit. 540 PTO	2.50m (8' 1")	785kg	70	CALL FOR CLEARANCE PRICING 1800 454 150	
MJ31-280	Cyclone Rotary Mower 2.8m Std with rear roller - No wheel kit. 540 PTO	2.80m (9' 2")	945kg	80	CALL FOR CLEARANCE PRICING 1800 454 150	

MAJOR CS PRO COMPACT MOWER

The CS Pro MJ65-150 is a versatile mower for compact tractors (20–40hp), featuring a low-maintenance gearbox driveline for simple, reliable operation. Its unique mulching blade system delivers consistent results in dense vegetation, heavy scrub, hedgerows, turf and stubble, with fewer wearing parts than a flail mower to reduce lifetime maintenance costs.

Manufactured from high-performance Strenx™ 700 MC structural steel and finished in hot-dip galvanising, the MJ65-150 is built for durability, efficiency and long-term value.



KEY FEATURES:

- Hot-dip galvanised finish
- Unique mulching blade system
- Gearbox driveline
- Fewer wearing parts than flail mowers
- Heavy-duty full-length rear roller

Model No.	Working Width	Weight	Tractor HP (Min.)	RRP ex GST	RRP inc GST
MJ65-150	1.45m (4' 9")	350kg	20	DISCONTINUED	

Photos may contain optional extras. Prices and specifications may change without notice.

SPEARHEAD

MULTICUT 420 ROTARY FLEX WING SLASHER

The Spearhead Multicut 420 is a 3-point linkage mounted rotary slasher ideal for tractors from 80hp and above. Positioned perfectly between fixed and trailed mowing units, it offers excellent versatility with a 4.2m cutting width while remaining compact for tighter access areas.

A heavy-duty 100hp driveline operating at 1000rpm powers three rotors, each fitted with three blades running at over 80 metres per second, delivering effortless cutting performance in demanding conditions. The delta-style deck construction promotes smooth material flow, while the heavy-duty floating linkage maintains an even finish across rough terrain.

Four heavy-duty industrial wheels provide stability, with simple pin height adjustment on the wheel arms for quick in-field cutting height changes. Inward folding wings reduce transport width to 2.9m, and as a linkage-mounted unit, no on-road towing kit is required.

Built for strength and longevity, the Multicut 420 features a fully seam-welded 5mm deck plate, full-length skids, heavy-duty updraft blades, anti-scalp dishes, slip clutch protection and a 7-year gearbox warranty.

KEY FEATURES:

- Cutting Width: 4.2m
- Transport Width: 2.9m
- 4 x 100HP *(75KW)* Rotor Gearboxes
- 1000rpm PTO
- Three rotors with nine blades total
- 80hp+ tractor requirement
- 7-year gearbox warranty

Designed for versatility, stability and high-performance mowing in challenging conditions.



Model No.	Description	Working Width	Weight	HP (Min.)	RRP ex GST	RRP inc GST
9560629	Heavy Duty Triple Spindle Slasher 1000rpm PTO	4.71m (15’ 6”)	1875kg	80	AU$47,736	**AU$52,509**



Photos may contain optional extras. Prices and specifications may change without notice.

FIELDQUIP

SAMURAI 15 FLEX WING SLASHER

The all-new Samurai 15 from Fieldquip Ag & Turf sets a new standard in pasture mowing. Engineered for performance and efficiency, it delivers fine cutting and semi-mulching power without the high horsepower demand of comparable machines.

Designed to operate with smaller tractors while achieving exceptional results, the Samurai features a unique high-lift blade system with up to 100mm cutting capacity, handling tough terrain while maintaining a clean finish. Its flat-top and underside deck design reduces debris build-up and minimises seed transfer between paddocks for cleaner, more efficient mowing.

Built for durability and productivity, the Samurai 15 combines a user-friendly trailing drawbar, fixed towing eye and folding wings for safe, convenient transport

KEY FEATURES:

- Cutting Width: 4.6m
- Transport Width: 2.7m
- 100mm cutting diameter capacity
- 1 x 250HP *(186KW)* Splitter Gearbox
- 3 x 165hp *(123kW)* Rotor Gearboxes
- Designed for efficiency, durability and high performance

When quality, efficiency and ease of use matter, the Samurai 15 delivers.

Model No.	Description	Working Width	Weight	HP (Min.)	RRP ex GST	RRP inc GST
9948040	Heavy Duty Triple Spindle Slasher 540rpm PTO	4.79m (15' 9")	2445kg	70	AU$61,198	**AU$67,318**



Photos may contain optional extras. Prices and specifications may change without notice.



**Photos are of original prototypes and may be subject to minor changes.*



Photos may contain optional extras. Prices and specifications may change without notice.

FIELDQUIP

SAMURAI 20 FLEX WING SLASHER

The all-new Samurai 20 from Fieldquip Ag & Turf sets a new benchmark in high-capacity pasture mowing. Engineered for performance and efficiency, it delivers fine cutting and semi-mulching power without the excessive horsepower demand of comparable machines.

Designed for larger-scale operations, the Samurai 20 features a heavy-duty 5-spindle design and 1000 RPM PTO driveline for superior power transfer and consistent performance across its full working width. Its unique high-lift blade system handles tough terrain up to 100mm cutting capacity while maintaining a clean, even finish. The flat-top and underside deck design reduces debris build-up and minimises seed transfer between paddocks for cleaner, more efficient mowing.

Built for durability and productivity, the Samurai 20 combines robust construction with folding wings for safe, convenient transport between jobs.

KEY FEATURES:

- Cutting Width: 6.5m
- Transport Width: 2.7m
- Heavy-Duty 5 Spindle Design
- 1000 RPM PTO
- 100mm cutting diameter capacity
- 1 x 250HP *(186KW)* Splitter Gearbox
- 5 x 165hp *(123kW)* Rotor Gearboxes
- Designed for efficiency, durability and high performance

When scale, strength and efficiency matter, the Samurai 20 delivers.

Model No.	Description	Working Width	Weight	HP (Min.)	RRP ex GST	RRP inc GST
9965040	Heavy Duty 5 Spindle Slasher 1000rpm PTO	6.47m (21' 3")	3100kg	100	AU$77,008	**AU$84,709**



Photos may contain optional extras. Prices and specifications may change without notice.



*Photos are of original prototypes and may be subject to minor changes.



Photos may contain optional extras. Prices and specifications may change without notice.

SPEARHEAD

MULTICUT 480 ECO-LINE FLEX WING SLASHER

The Spearhead Multicut 480 Eco-Line is a high-output trailed rotary flex wing slasher designed to cover large areas quickly and efficiently. Based on the industry-leading Multicut 460 platform, the 480 Eco-Line delivers proven performance with the strength and durability expected for demanding agricultural and commercial applications.

With a 4.6m cutting width, it is popular with farmers, airports and military organisations where productivity and reliability are essential. Nine heavy-duty steel blades provide effective cutting performance across varied terrain, ensuring consistent results in pasture topping and general mowing operations.

A flat topskin, combined with a flat underside deck design, helps prevent debris build-up during operation. This not only improves efficiency but also reduces the risk of transferring unwanted seeds between paddocks or crop areas. The streamlined deck design also contributes to improved energy efficiency.

Mounting is straightforward with a fixed towing eye supplied as standard, while optional swivel and K80 hitch versions are available to suit different towing requirements. Folding wings make transport between sites simple and convenient, improving manoeuvrability and reducing overall travel width.

KEY FEATURES:

- 4.6m cutting width for fast, high-capacity mowing
- Nine heavy-duty steel blades
- Flat topskin and underside to minimise debris build-up
- Reduced risk of seed transfer between areas
- Fixed towing eye as standard
- Folding wings for easy transport
- 1 x 250HP *(186KW)* Splitter Gearbox
- 3 x 165hp *(123kW)* Rotor Gearboxes



Built for productivity, durability and ease of use, the Multicut 480 Eco-Line delivers efficient mowing performance across large-scale operations.

Model No.	Description	Working Width	Weight	HP (Min.)	RRP ex GST	RRP inc GST
9948010	Heavy Duty Triple Spindle Slasher 1000rpm PTO ECO-LINE	4.79m (15' 9")	2690kg	70	AU$70,668	**AU$77,734**



Photos may contain optional extras. Prices and specifications may change without notice.

SPEARHEAD

MULTICUT 650 PRO-LINE FLEX WING SLASHER

The Spearhead Multicut 650 Pro-Line is a heavy-duty 6.2m flex wing slasher built for serious acreage and high work rates. Designed for broadacre pasture topping, stubble management and farm maintenance, it delivers fast, consistent output in tough conditions.

Five rotors fitted with Spearhead's six-blade Starcut system (30 heavy-duty blades in total) provide an exceptionally fine chop from grass through to light scrub. The even spread across the full cutting width leaves a clean finish, outperforming comparable three-rotor machines.

A heavy-duty driveline with a 250hp input gearbox and high-capacity rotor gearboxes ensures reliable power transfer, all protected by slip clutches for durability in demanding work. Hydragas suspension, built-in shock absorbers and a walking axle improve stability and reduce ground pressure, while wide industrial tyres provide better flotation across uneven ground. Hydraulic wing lift and mechanical wing float allow the mower to follow contours, and folding wings reduce transport width to 2.8m for safer road travel.

Built to handle hard use, the 650 Pro-Line features a reinforced smooth deck, full-length side skids, anti-scalp dishes, full-width safety chains, integrated seal protection and a rear lighting kit. A 7-year gearbox warranty backs its long-term reliability.



KEY FEATURES:

- Cutting Width: 6.2m
- Transport Width: 2.8m
- Five rotors with 30 heavy-duty blades
- 250hp input gearbox
- Slip clutch protection
- Hydragas suspension with walking axle
- 7-year gearbox warranty
- 1 x 250HP *(186KW)* Splitter Gearbox
- 5 x 165hp *(123kW)* Rotor Gearboxes

Built for high hectares per hour, durability and dependable performance.

Model No.	Description	Working Width	Weight	HP (Min.)	RRP ex GST	RRP inc GST
9965002	Heavy Duty 5 Spindle Slasher 1000rpm PTO PRO-LINE	6.47m (21' 3")	3300kg	90	AU$92,456	**AU$101,701**



Photos may contain optional extras. Prices and specifications may change without notice.

SPEARHEAD

MULTICUT 830 PRO-LINE FLEX WING SLASHER

The Spearhead Multicut 830 Pro-Line is a heavy-duty 8.26m flex wing rotary slasher built for maximum output and serious broadacre work. Designed for large-scale pasture topping, stubble management and high-hectare contract applications, it delivers exceptional productivity in demanding Australian conditions.

Five rotors fitted with Spearhead's six-blade Starcut system (30 heavy-duty winged blades in total) provide an extremely fine chop from heavy grass through to light scrub. The even spread across the full cutting width ensures a clean, consistent finish, making it ideal for operators targeting 100+ hectares per day.

A premium driveline featuring a 250hp splitter gearbox and high-capacity rotor gearboxes (rated from 165hp), all protected by slip clutches, ensures reliable and even power transfer across the machine. Hydragas suspension and a full-width walking axle system reduce shock loading and improve stability, while eight large implement tyres provide excellent flotation and ground contour following. Hydraulic wing lift and mechanical wing float allow the mower to track undulating country, with folding wings reducing transport width for safer road travel.

Built for long-term durability, the 830 Pro-Line features a reinforced smooth-top deck to prevent debris build-up, full-length side skids, anti-scalp dishes, full-width front and rear safety chains, integrated seal protection, premium long-life driveshafts and an LED lighting kit. A 7-year gearbox warranty underlines its strength and reliability.

KEY FEATURES:

- Cutting Width: 8.06m (26' 5" * Five rotors with 30 heavy-duty Starcut blades
- 1 x 250HP *(186KW)* Splitter Gearbox
- 5 x 165hp *(123kW)* Rotor Gearboxes
- Hydragas suspension with full-width walking axles
- 8 rear implement tyres
- 7-year gearbox warranty



Built for maximum hectares per hour, strength and dependable large-scale performance.

Model No.	Description	Working Width	Weight	HP (Min.)	RRP ex GST	RRP inc GST
9983002	Heavy Duty 5 Spindle Slasher 1000rpm PTO PRO-LINE	8.26m (27' 1")	4800kg	150	AU$120,958	**AU$133,054**



Photos may contain optional extras. Prices and specifications may change without notice.

MAJOR
CONTOURA FINISHING MOWER

The MAJOR Contoura is a heavy-duty, multi-deck mower designed to deliver a consistent, high-quality finish on undulating and challenging terrain. Suitable for tractors from 35hp and above, it is ideal for golf fairways and rough, sports grounds and large turf areas where presentation matters.

A unique multi-pivoting frame with self-aligning spherical bearings allows the three mowing decks to closely follow ground contours, ensuring an even cut across hilly or uneven ground. Full-width rollers maintain a consistent height and produce a professional striped finish, while zero-turn capability enables tight manoeuvring around obstacles without turf damage.

Powered by a gear-driven driveline, the Contoura eliminates the issues associated with belt-driven systems and maintains high blade tip speeds for efficient cutting in dense grass. Cutting height is easily adjustable from 10–110mm to suit a range of turf applications.

Manufactured from Strenx™ 700 MC high-strength steel and fully galvanised for corrosion protection, the Contoura is built for long-term durability. The Series 2 model features 5mm boron steel blades, with a simple adjustment allowing conversion from rigid to swinging blade configuration.

KEY FEATURES:

- Unique pivoting frame with self-aligning spherical bearings allow the mowing decks to follow the ground contours with ease
- Fully galvanised finish for even longer machine life
- Gear-driven drive line, eliminates the problems associated with belt-driven mowers
- Cutting height range: 10–110mm
- Zero-turn capability
- Even distribution of cut material
- Full width rollers follow undulations to give a consistent cut, even in the most challenging terrains
- Two blade systems in one; a simple adjustment converts the blade from rigid blade to swinging blade



Built for durability, precision and consistent performance on uneven terrain.

Model No.	Description	Working Width	Weight	HP (Min.)	RRP ex GST	RRP inc GST
MJ76-360	Contoura following Fairway Mower	3.60m (11' 9")	1580kg	35	CALL FOR CLEARANCE PRICING 1800 454 150	



Photos may contain optional extras. Prices and specifications may change without notice.

MAJOR

CENTRE MOUNTED GRASS TOPPER

The MAJOR Centre Mounted Grass Topper is a fully gear-driven machine designed for efficient pasture topping and general farm maintenance. Built for reliability and consistent performance, it features high-speed rotors fitted with a twin-cut swinging mulching blade system for effective grass control and even material distribution. The MJ55-270 model is a heavier-duty version, equipped with extra heavy-duty gearboxes for demanding conditions.

With no belts or pulleys, the gear-driven transmission reduces maintenance and improves long-term durability. Rubber shock absorbers positioned between the rotor gearboxes help absorb impact loads, protecting the driveline during operation. A galvanised finish comes standard for corrosion resistance and extended service life.

KEY FEATURES:

- Working Width: 2.7m *(9')*
- PTO Speed: 1000 RPM
- Fully gear-driven transmission
- Twin-cut swinging mulching blade system
- *Four blades per rotor
- Heavy-duty gearboxes with rubber shock absorbers
- Low maintenance – no belts or pulleys
- Galvanised finish as standard

Built for strength, simplicity and reliable pasture management.



Model No.	Description	Working Width	Weight	HP (Min.)	RRP ex GST	RRP inc GST
909-HD	MJ55-270 Centre Mount Pasture Topper 2.7m - Standard Galvanised finish	2.7m (9')	560kg *(640kg with wheels)*	50	CALL FOR CLEARANCE PRICING 1800 454 150	



Photos may contain optional extras. Prices and specifications may change without notice.

MAJOR
FLEX WING GRASS TOPPER

The MAJOR Flex Wing Grass Topper is a heavy-duty three-point linkage mounted machine designed for efficient pasture topping and large-scale grass maintenance. Folding to a compact 2.3m (7'6") transport width, it provides convenient transport between properties while maintaining a wide 5.40m (18') working width for maximum productivity.

Built to MAJOR's renowned robust standards, the Flex Wing Topper features hydraulically operated wings that raise easily into transport position. During operation, the wings flex from -15° to +25°, allowing the machine to closely follow ground contours for a consistent and even finish across undulating terrain.

Contra-rotating ProCut swinging blades are retained in hardened steel bushings and secured with sprung steel blade backs for durability and reliable performance. Under-sole discs prevent scalping and help deliver a clean, professional cut, while an 88mm (3½") blade overlap eliminates striping. A galvanised finish comes standard for corrosion resistance and extended service life.



KEY FEATURES:

- Working Width: 5.40m *(18')*
- Transport Width: 2.3m *(7'6")*
- PTO Speed: 1000 RPM
- Hydraulic wing lift
- Wing flex range: -15° to +25°
- ProCut swinging blades
- 88mm *(3½")* blade overlap
- Slip clutch PTO protection
- Robust pivot points with rubber shock absorbers
- Galvanised finish as standard

Built for strength, flexibility and high-output pasture management.

Model No.	Description	Working Width	Weight	HP (Min.)	RRP ex GST	RRP inc GST
MJ38-540	Flex Wing Pasture Topper 5.6m	5.40m (18')	1395kg	80	DISCONTINUED	



Photos may contain optional extras. Prices and specifications may change without notice.

MAJOR
RIGID DECK ROLLER MOWERS

The MAJOR Swift Rigid Deck Roller Mower (MJ71-190 & MJ71-240) is a heavy-duty, gear-driven mower designed for everyday use where a durable and reliable machine is required. Built for precision and consistent performance, it delivers a professional cylinder mower finish every time, even in challenging conditions.

With a fully gear-driven transmission, the Swift mower avoids the issues associated with belt-driven machines, reducing maintenance and improving long-term durability. Sealed internal roller bearings protect against moisture, soil and debris, while full-width rollers follow ground contours to prevent scalping and produce a consistent striped finish. Strenx™ 700 MC high-strength steel is used throughout, with a galvanised finish for corrosion resistance and extended service life.

KEY FEATURES:

- PTO Speed: 540 RPM
- Fully gear-driven transmission
- Two blade systems in one: a simple adjustment converts the blade from rigid blade to swinging blade
- Cutting height: 10–130mm
- 75mm blade overlap for an impeccable finish
- Sealed internal roller bearings
- Full-width rollers to follow ground contours



Built for reliability, durability and superior turf management.

Model No.	Description	Working Width	Weight	HP (Min.)	RRP ex GST	RRP inc GST
MJ71-190	Rigid Deck Roller Mower 2.0m	1.90m (6’ 3”)	475kg	25	CALL FOR CLEARANCE PRICING 1800 454 150	
MJ71-240	Rigid Deck Roller Mower 2.5m	2.40m (8’)	560kg	30	CALL FOR CLEARANCE PRICING 1800 454 150	



Photos may contain optional extras. Prices and specifications may change without notice.

MAJOR
WINGED ROLLER MOWER
(THREE POINT LINKAGE)

The MAJOR Swift Winged Roller Mower is a three-point linkage machine designed to deliver a professional, striped finish with ease. Built for reliability and precision, it provides exceptional after-cut appearance across a wide range of conditions. The three-point linkage system ensures close attachment to the tractor for easier towing and safer road transport.

With a 60mm blade overlap and high blade tip speeds, the Swift Winged Roller Mower consistently produces a clean, even cut. The versatile two-in-one blade system allows a simple adjustment from rigid blades to swinging blades, making it suitable for a variety of mowing tasks throughout the year.

Constructed from Strenx™ 700 MC high-performance steel and hot-dip galvanised, this mower is built to last, offering extended lifespan. The hydraulically operated wings fold up to a compact 1.90m (6’ 3”) transport width.

KEY FEATURES:



- Three-point linkage mounting
- PTO Speed: 540 RPM
- Two blade systems in one: a simple adjustment converts the blade from rigid blade to swinging blade
- Cutting height: 10–130mm
- 60mm blade overlap for a pristine finish
- Sealed internal roller bearings
- Full-length rollers follow ground contours Strenx™ 700 MC galvanised steel construction
- Hydraulically folding wings – fold up for 1.90m *(6’ 3”)* transport width

Built for durability, precision and superior turf management, the Swift Winged Roller Mower ensures every cut leaves a professional finish.

Model No.	Description	Working Width	Weight	HP (Min.)	RRP ex GST	RRP inc GST
MJ71-340	3PL Swift Folding Wing Roller Mower 3.2m	3.40m (11’ 2”)	940kg	40	DISCONTINUED	
MJ71-400	3PL Swift Folding Wing Roller Mower 4.1m	4.00m (13’ 1”)	1100kg	60	CALL FOR CLEARANCE PRICING 1800 454 150	
MJ71-540	3PL Swift Folding Wing Roller Mower 5.5m	5.40m (17’ 9”)	1270kg	70	DISCONTINUED	



Photos may contain optional extras. Prices and specifications may change without notice.

MAJOR
WINGED ROLLER MOWER (TRAILED)

The MAJOR Swift Trailed Winged Roller Mower is a robust, wide-area mower built for contractors, turf farms and local authorities managing extensive grass areas. Designed for both performance and safety, it combines professional cutting quality with secure, easy transport between sites.

Constructed from high-performance Strenx™ 700 MC structural steel and hot-dip galvanised, this trailed mower is lightweight yet exceptionally strong, delivering long service life. Full-width rollers follow the ground contours to prevent scalping and produce a clean, striped finish every time.

The versatile two-in-one blade system allows a simple adjustment from rigid to swinging blades for effective year-round mowing. Cutting height can be easily adjusted from 10–130mm to suit different conditions. A gear-driven power line ensures low maintenance and reliable performance, while sealed internal roller bearings protect against moisture, soil and debris.

For safe and legal road transport, the mower comes fully braked and includes a LED road lighting kit as standard.

KEY FEATURES:

- Trailed winged design
- Two-in-one blade system – rigid or swinging
- Cutting height: 10–130mm
- Gear-driven power line for low maintenance
- Sealed internal roller bearings
- Strenx™ 700 MC galvanised steel construction
  LED road lighting kit and fully braked for safe transport



Built for strength, efficiency and professional grass management across large areas, the Swift Trailed Winged Roller Mower delivers outstanding results with minimal effort.

Model No.	Description	Working Width	Weight	HP (Min.)	RRP ex GST	RRP inc GST
MJ71-400T	Trailed Swift Folding Wing Roller Mower 4.1m	4.00m (13’ 1”)	1665kg	60	DISCONTINUED	
MJ71-540T	Trailed Swift Folding Wing Roller Mower 5.5m	5.40m (17’ 9”)	1830kg	70	DISCONTINUED	
MJ71-600T	Trailed Swift Folding Wing Roller Mower 6.0m	6.00m (20’)	2025kg	90	DISCONTINUED	
MJ71-730T	Trailed Swift Folding Wing Roller Mower 7.3m	7.30m (24’)	2270kg	105	DISCONTINUED	



Photos may contain optional extras. Prices and specifications may change without notice.

MAJOR

MR FINISHING MOWER

The MAJOR MR Finishing Mower is designed to deliver a high-quality finish across large lawns, estates, parks, golf courses and municipal areas. Built for efficiency and ease of use, it connects quickly to the tractor's three-point linkage, allowing the machine to be ready for operation within minutes.

Engineered with operator safety in mind, all maintenance points are positioned on top of the machine to minimise risk and improve accessibility. The four pivoting castor wheels are easily adjusted without tools and can be set precisely to prevent scalping, ensuring a smooth and even finish across varying terrain.

Overlapping blades rotate within individual aerofoils to create a powerful vacuum effect, lifting flattened grass for a clean, professional cut. A twin-belt transmission system with integrated tensioner provides smooth power transfer and reliable performance.



KEY FEATURES:

- Three-point linkage mounting
- PTO Speed: 540 RPM
- Overlapping blades
- Adjustable working depth
- Two belt transmission with tensioner
- Four pivoting rubber wheels

Built for precision, safety and consistent turf presentation, the MAJOR MR Finishing Mower delivers a professional finish across a wide range of applications

Model No.	Description	Working Width	Weight	HP (Min.)	RRP ex GST	RRP inc GST
MR150	Finishing Mower	1.54m (5' 1")	210kg	15	CALL FOR CLEARANCE PRICING 1800 454 150	
MR180	Finishing Mower	1.84m (6' 1")	245kg	20	DISCONTINUED	
MR235	Finishing Mower	2.37m (7' 9")	310kg	30	CALL FOR CLEARANCE PRICING 1800 454 150	



Photos may contain optional extras. Prices and specifications may change without notice.

MAJOR

MJ27 GREEN BEE FLAIL COLLECTORS

The MAJOR MJ27 Green Bee Flail Collectors (MJ27-160 and MJ27-180) are medium-duty, multi-purpose machines designed to deliver efficient cut-and-collect performance across a wide range of applications. Combining mowing, scarifying, collecting, chopping and rolling in a single pass, the Green Bee maximises productivity while maintaining a superior finish.

Available in two working widths – 1.6m and 1.8m – the MJ27 Green Bee is ideal for sports grounds, golf courses, paddock maintenance, airports and airfields, campsites, public open spaces and private estates. The 2.0m³ collection hopper ensures high-capacity operation, while the 2.2m hydraulic high-tip discharge allows for fast and efficient emptying into skips or trucks.



Heavy-duty flail blades are supplied as standard, delivering reliable performance in demanding conditions. An optional scarifying kit is available, enabling aeration and surface renovation in the same pass.

Designed for year-round reliability and versatility, MAJOR Flail Collectors are built to handle everything from formal turf maintenance to clearing overgrown vegetation and supporting biodiversity programs. They are equally effective for leaf collection, hedge trimmings and general debris removal, making them an essential professional solution for comprehensive turf and landscape management.

Model No.	Description	Working Width	Weight	HP (Min.)	RRP ex GST	RRP inc GST
MJ27-160 GB	1.6m Green Bee Flail Collector	1.60m (5’ 2”)	750kg	45	DISCONTINUED	
MJ27-180 GB	1.8m Green Bee Flail Collector	1.80m (5’ 10”)	785kg	50	DISCONTINUED	

Optional Extras

PART No.	DESCRIPTION	RRP ex GST	RRP inc GST
1416000402	Scraper Bar for MJ27-160-GB	DISCONTINUED	
1418000402	Scraper Bar for MJ27-180-GB	DISCONTINUED	
MJ160-HT-SCAR	Flail Collector Scarifying Kit for MJ27-160-GB	DISCONTINUED	
MJ180-HT-SCAR	Flail Collector Scarifying Kit for MJ27-180-GB	DISCONTINUED	



Photos may contain optional extras. Prices and specifications may change without notice.

MAJOR

MJ2000 HEAVY DUTY FLAIL COLLECTOR

The MAJOR MJ2000 Heavy Duty Flail Collector is purpose-built for professional, large-scale green space maintenance. Featuring a 2.0m working width and a high-capacity 3.0m³ collection hopper, the MJ2000 delivers maximum productivity and efficiency in demanding environments.

Engineered with a robust construction, the MJ2000 is designed to perform in challenging conditions including scrubland and areas covered in lantana, blackberry and dense woody weeds, while still capable of producing a clean, fine finish in standard turf applications. This versatility makes it ideal for contractors, councils, estates and large property managers requiring a dependable cut-and-collect solution.

The floating linkage system allows the machine to closely follow ground contours, even across uneven or punishing terrain, ensuring consistent cutting performance and a quality finish. A simple hydraulic high-lift function enables the 3.0m³ hopper to tip at 2.1m, allowing for fast and efficient emptying into trailers or skips.

Fitted with BKT turf tyres to minimise ground compaction, the MJ2000 is suitable for use with large compact and agricultural tractors, making it a powerful and reliable choice for intensive vegetation management and turf maintenance operations.

Model No.	Description	Working Width	Weight	HP (Min.)	RRP ex GST	RRP inc GST
MJ2000	2.0m Flail Collector	2.0m (6’ 6”)	1900kg	50	DISCONTINUED	

Optional Extras

PART No.	DESCRIPTION	RRP ex GST	RRP inc GST
MJ-2000-SCAR-32	Flail Collector Scarifying Kit for MJ2000	DISCONTINUED	



Photos may contain optional extras. Prices and specifications may change without notice.

MAJOR
OSM-VERGE MOWER

The MAJOR OSM-Verge Mower is a heavy-duty offset mower designed for professional verge, roadside and embankment maintenance. Built for durability and precision in demanding conditions, it features a hydraulic headstock with 140° movement and a hydraulic arm operating from 95° to -35°, allowing operators to cut verges, ditches, embankments, shrubs and light tree growth with confidence.

With up to 1.56m offset capability, it provides excellent reach around fences, buildings and under trees without compromising stability or finish. A full-length rear roller follows ground contours for a consistent cut, with adjustable cutting heights from 15–100mm.

Manufactured from high-performance Strenx™ 700MC structural steel and fully galvanised for corrosion resistance, the OSM-Verge Mower is fuel efficient, low maintenance and requires fewer wearing parts than a comparable flail mower. Available in 1.4m and 2.19m working widths (left-hand configuration stocked).

KEY FEATURES:



- Unique blade system for extreme cutting and protection. In the event of hitting an obstacle, the blades retract upwards out of the line of impact, preventing breakages and damage to gearboxes and driveline.
- Hydraulic arm operates from 95° to -35°.
- Internal double roller bearing housing supports the full-length roller while cutting and protects bearings.
- Heavy-duty gearboxes with inter-gearbox shock loading protection to safeguard the machine in the event of a collision.
- Rubber skirting to reduce flying debris.
- Available in left- or right-hand configurations *(LH stocked)*.
- Fuel efficient, low maintenance design with fewer wearing parts than a flail mower.

Built for strength, protection and precision cutting, the MAJOR OSM-Verge Mower delivers professional results in the toughest verge and embankment conditions.

Model No.	Description	Working Width	Weight	HP (Min.)	RRP ex GST	RRP inc GST
MJ36-140LH	Offset Verge Mower 1.4m – Left-Hand Configuration	1.43m (4’ 8.5”)	690kg	70	DISCONTINUED	
MJ36-140RH	Offset Verge Mower 1.4m – Right-Hand Configuration	1.43m (4’ 8.5”)	690kg	70	DISCONTINUED	
MJ36-210LH	Offset Verge Mower 2.1m – Left-Hand Configuration	2.11m (6’ 11”)	810kg	90	CALL FOR CLEARANCE PRICING 1800 454 150	
MJ36-210RH	Offset Verge Mower 2.1m – Right-Hand Configuration	2.11m (6’ 11”)	810kg	90	DISCONTINUED	



Photos may contain optional extras. Prices and specifications may change without notice.

SPEARHEAD

OUTFRONT FLAIL MOWER

The Spearhead Outfront Flail Mower is a compact, high-performance front-mounted mower designed for councils and contractors requiring reliability, versatility and a superior finish.

Featuring a spiral rotor design and heavy-duty hammer flails as standard, the Outfront delivers a consistent, high-quality cut in material up to 30mm in diameter. Available in a 1.6m cutting width, the machine ensures efficient coverage while maintaining excellent finish quality. A 4½" rear roller further enhances cut consistency and ground contouring.

A robust three-belt drive transmission provides dependable power transfer, while easily adjustable cutting height and front guide wheels improve operator control and ease of use. Built for durability and all-day performance, the Spearhead Outfront Flail Mower is a reliable solution for demanding municipal and contractor applications.

Built to integrate seamlessly with leading front mower carriers via a two-point linkage system, the Outfront provides adaptable fitment for widely used municipal platforms.

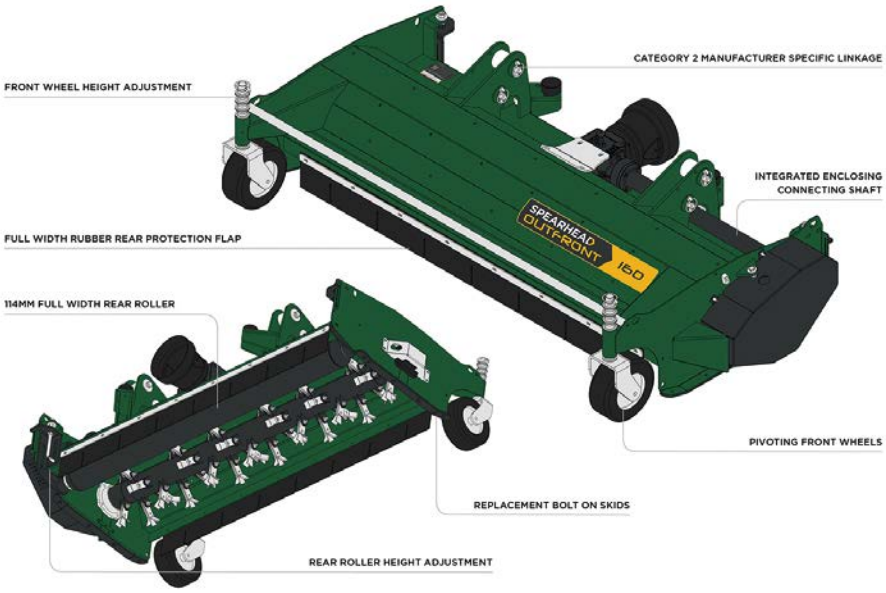

ATTACHMENT COMPATIBILITY:

- 1.6m Outfront Flail Mower – Kubota Attachment
- 1.6m Outfront Flail Mower – John Deere Attachment

Model No.	Description	Working Width	Weight	HP (Min.)	RRP ex GST	RRP inc GST
SPH-OFRNT160	Outfront Flail Mower 1.6m – KU	1.60m (5' 3")	250kg	14	AU$12,414	**AU$13,656**
SPH-OF160JD	Outfront Flail Mower 1.6m – JD	1.60m (5' 3")	250kg	14	AU$12,414	**AU$13,656**



Photos may contain optional extras. Prices and specifications may change without notice.

FIELDQUIP

LIFESTYLE POST HOLE DIGGERS



FOR 18-35 HP TRACTORS:

- 65mm x 65mm RHS constructor.
- Standard with 1 x 12” auger.
- Friction clutch gearbox protection.
- Choice of adjustable holes for easy installation.

Optional augers shown below

Model No.	Finish	Weight	HP (Min.)	RRP ex GST	RRP inc GST
LPD18-900	Green/Red	80kg	18 - 35	AU$3,094	**AU$3,404**

FOR 18-75 HP TRACTORS:

- Strong heavy wall 100mm x 100mm RHS construction.
- Friction clutch.
- Double cut augers standard.
- Choice of adjustable holes for easy installation.

Augers not included please refer to selection below.

POST HOLE DIGGERS

Model No.	Finish	Weight	HP (Min.)	RRP ex GST	RRP inc GST
HPD20-900	Green/Red	140kg	18 - 75	AU$3,099	**AU$3,409**
HPD50-900	Green/Red	170kg	18 - 75	AU$3,513	**AU$3,865**
HPD75-900	Green/Red	190kg	18 - 75	AU$4,010	**AU$4,411**

AUGERS

Model No.	Diameter	RRP ex GST	RRP inc GST
AR100	100 mm (4”)	AU$507	**AU$557**
AR150	150 mm (6”)	AU$569	**AU$626**
AR230	230 mm (9”)	AU$615	**AU$677**
AR300	300 mm (12”)	AU$631	**AU$694**
AR380	380 mm (15”)	AU$750	**AU$825**
AR460	460 mm (18”)	AU$822	**AU$905**
AR610	610 mm (24”)	AU$1,273	**AU$1,400**



Photos may contain optional extras. Prices and specifications may change without notice.

RHINO

REBEL SERIES ROTARY TILLERS

The Rhino Rebel Series Rotary Tillers combine state-of-the-art design with heavy-duty construction to deliver reliable soil preparation across a range of applications. Available in multiple working widths, tine rotation is standard (forward rotation), providing strong soil penetration and a consistent, professional finish.

Each rotor flange is fitted with six hardened “L” shaped blades for effective mixing and tilth. Built for durability, the Rebel Series features continuously welded hitch points, ½” steel end plates and a robust cast iron gearbox housing. Slip-clutch driveline protection comes standard to reduce shock loads and minimise downtime, while reverse models include a metal debris deflector for added protection.



HITCH COMPATIBILITY:

- CAT 1 Standard and Quick Hitch *(5 ft & 6 ft models)*
- CAT 1 & 2 Standard and Quick Hitch *(7 ft model)*

Ideal for homeowners, contractors, landscapers, and orchard or vineyard operators, the Rhino Rebel Series delivers dependable performance, strength and long-term reliability

Model No.	Description	Working Width	Weight	HP (Min.)	RRP ex GST	RRP inc GST
REB48	Single Spindle Utility Cutter 1.2m	1.2m (47")	170kg	15	AU$4,544	**AU$4,999**
REB60	Single Spindle Utility Cutter 1.5m	1.5m (59")	305kg	25	AU$4,732	**AU$5,205**
REB72	Single Spindle Utility Cutter 1.8m	1.8m (70")	340kg	35	AU$5,194	**AU$5,714**
RED84	Single Spindle Utility Cutter 2.0m	2.0m (78")	370kg	45	AU$6,234	**AU$6,858**



FIELDQUIP

100 SERIES COMPACT DISC HARROWS

The Fieldquip 100 Series Lift Disc Harrows are built to boost tractor productivity and deliver reliable soil preparation in a range of conditions. Featuring a heavy-duty 50 mm square tube frame and heat-treated notched discs, they provide consistent penetration and effective cultivation.

Adjustable front and rear gangs allow quick changes from light tillage to more aggressive cutting, giving you flexibility in the field. Designed to suit tractors around 26 kW (35 HP), the 100 Series is ideal for small farms, lifestyle properties and general ground preparation.

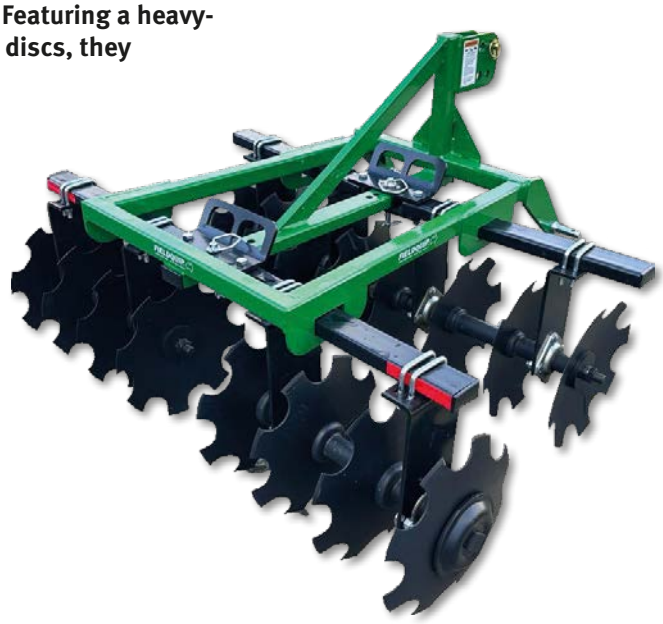

KEY FEATURES:

- CAT 1 quick hitch compatible
- 190 mm or 230 mm disc spacing
- Sealed, self-aligning bearings
- 76 mm x 38 mm gang tubes
- 25 mm high-carbon gang axles
- Adjustable gang angles *(front: 0°–21°, rear: 7°–21°)*

Model No.	Description	Working Width	Weight	HP (Min.)	RRP ex GST	RRP inc GST
100-3-03	3PL Compact Disc Harrows 1.5m Green	1.5m	230kg	35	AU$4,652	**AU$5,117**
100-8-03	3PL Compact Disk Harrows 1.98m Green	1.98m	315kg	35	AU$4,962	**AU$5,459**

FIELDQUIP

200 SERIES COMPACT DISC HARROWS

The Fieldquip 200 Series Lift Disc Harrows are built for heavier-duty cultivation and increased productivity. With a stronger frame and robust disc setup, they deliver reliable soil penetration and consistent ground preparation across a range of conditions.

Adjustable front and rear gangs allow you to quickly move from light tillage to more aggressive cutting, giving you flexibility in the field. Designed to suit tractors around 48 kW (65 HP), the 200 Series is ideal for small farms, contractors and more demanding applications.

KEY FEATURES:

- CAT 1 quick hitch compatible
- 190 mm or 230 mm disc spacing
- Heavy-duty 63 mm square tube frame
- 10 mm gang hangers secured with dual 16mm U-bolts
- Sealed, self-aligning ball bearings
- 76 mm x 50 mm gang tubes
- 25 mm high-carbon gang axles
- Adjustable gang angles *(front: 0°–21°, rear: 7°–21°)*

Model No.	Description	Working Width	Weight	HP (Min.)	RRP ex GST	RRP inc GST
200-6-03	3PL Compact Disc Harrows 1.98m Green	1.98m	333kg	65	AU$6,825	**AU$7,508**

Photos may contain optional extras. Prices and specifications may change without notice.

FIELDQUIP

50 SERIES GRADER BLADES

The 50 Series Grader Blade is a versatile, heavy-duty attachment designed for tractors from 25–50 HP. Built with a Category 1 quick hitch compatible A-frame and double strap hitch for added strength, it offers 5 forward angles, 3 reverse angles and 3 tilt positions for precise grading control.

Offset capability up to 16" provides added flexibility, while 6ft and 7ft moldboard options allow you to match the blade to your application.



KEY FEATURES:

- Multiple adjustment settings
- Optional skid shoes
- Manual angle, tilt and offset
- Replaceable cutting edges
- 6' 7" moldboard widths

Model No.	Description	Working Width	Weight	HP (Min.)	RRP ex GST	RRP inc GST
5006-03	50 Series Grader Blades 1.8m Green	1.8m	183kg	25	AU$3,286	**AU$3,614**
5007-03	50 Series Grader Blades 2.1m Green	2.1m	195kg	25	AU$3,513	**AU$3,865**



FIELDQUIP
CARRY ALL

Fieldquip Carry All is a strong, practical solution for transporting tools, fencing gear and general equipment around your property. Built with a heavy wall RHS frame and steel floor, it offers dependable performance with a 500kg load capacity. Finished in a durable two-pack paint for long-lasting protection.



KEY FEATURES:

- 500kg load capacity
- Heavy wall RHS frame
- Steel floor
- Two-pack finish
- Available in red or green *(other colours on request)*
- Proudly Made in Oakey QLD
- **Tray Sizes:**
  1200mm x 650mm & 1800mm x 830mm

Model No.	Description	Working Width	Weight	HP (Min.)	RRP ex GST	RRP inc GST
CRA12-900	Fieldquip Carry All 1.2m	1.2m (48")	65kg	20	AU$1,340	**AU$1,474**
CRA18-900	Fieldquip Carry All 1.8m	1.8m (72")	80kg	20	AU$1,480	**AU$1,628**



Photos may contain optional extras. Prices and specifications may change without notice.

FIELDQUIP
FEL PALLET FORKS

Australian made FEL pallet forks built for dependable material handling. Independently moving tines allow easy adjustment on uneven surfaces, while the high load guard and pin eye fork attachment provide strength and security.



KEY FEATURES:

- High load guard
- Pin eye style fork attachment
- Australian made
- Independently moving tines
- Available with Euro or John Deere hitch

Model No.	Description	Overall Width	Weight	RRP ex GST	RRP inc GST
PF1600AG-E	Fel Pallet Forks Att. Euro	Capacity: 1,600kg @600mm	140kg	AU$2,582	**AU$2,840**
PF1600AG-JD	Fel Pallet Forks Att. John Deere	Capacity: 1,600kg @600mm	140kg	AU$2,582	**AU$2,840**

FIELDQUIP
SINGLE TYNE RIPPER

Designed for 18–40HP tractors, the Fieldquip Light Duty Single Tyne Ripper is ideal for breaking compacted ground, improving drainage and preparing soil for planting. Built with a solid 100mm x 25mm steel main billet, it delivers strength and durability for small acreage and general property work.



KEY FEATURES:

- Suited for 18–40HP tractors
- Solid steel main billet *(100mm x 25mm)*
- CAT I linkage
- Medium tensile ripper point welded to main billet
- 300mm ripping depth

Model No.	Description	Weight	HP (Min.)	RRP ex GST	RRP inc GST
LSR-900	Single Tyne Ripper 0.1m x .025m 0.4m depth	40kg	18	AU$812	**AU$893**

Photos may contain optional extras. Prices and specifications may change without notice.

FIELDQUIP

HEAVY DUTY SINGLE TYNE RIPPER & PIPELAYER ATTACHMENT

Designed for 35–85HP tractors, this heavy-duty Single Tyne Ripper is built for deep ripping and underground installation work. When paired with the suitable pipelayer attachment (sold separately), it provides an efficient solution for laying pipe in demanding ground conditions. Manufactured in Oakey, Queensland, it is engineered for strength and long-term durability.



KEY FEATURES:

- Suited for 35–85HP tractors
- Solid steel main billet *(150mm x 32mm)*
- CAT I & II linkage
- Heat treated, replaceable and reversible chisel point
- 600mm ripping depth
- Heavy RHS cross bar *(100mm x 100mm x 6mm)*

Pipelayer attachment sold separately.

Model No.	Description	Weight	HP (Min.)	RRP ex GST	RRP inc GST
STR500	Single Tyne Ripper 0.15m x .032m 0.6m depth	60kg	35	AU$988	**AU$1,087**
PLY 500	Heavy Duty - Pipelayer (Suits STR150)	20kg	35	AU$714	**AU$785**

FIELDQUIP

3 TYNE RIPPER

Built for heavy-duty soil ripping, the Fieldquip 3 Tyne Ripper is designed to tackle compacted ground and tough conditions with ease. Rugged construction ensures long-term durability for property and farm work.



KEY FEATURES:

- Suited for tractors up to 90HP
- Category 2 linkage
- Three reversible points *(225mm / 9")*
- Solid steel tynes *(150mm × 32mm)* with chamfered edges
- Adjustable tyne height
- Ripping depth up to 0.6m

Model No.	Description	Overall Width	Weight	HP (Min.)	RRP ex GST	RRP inc GST
TTR500	3 Tyne Ripper	0.15m x 32 Tynes 0.6m depth	160kg	40	AU$3,037	**AU$3,341**

Photos may contain optional extras. Prices and specifications may change without notice.

FIELDQUIP
COMPACT LANDSCAPE RAKE

Designed for compact tractors, the Fieldquip Compact Landscape Rake is ideal for light grading, levelling and debris removal on small properties and landscaping jobs. Built with a durable frame and heat treated spring steel tines for long service life.

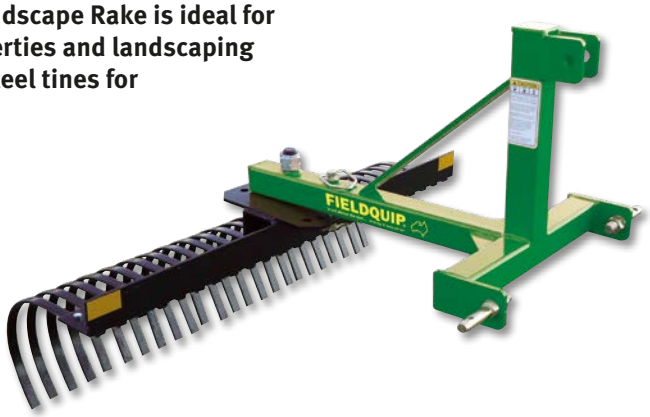

KEY FEATURES:

- Suited for 15–25HP tractors
- 5 forward angles and 3 reverse angles
- 2-hole, heat treated high carbon spring steel tines *(8mm × 25mm)*
- Heavy-duty rake frame *(75mm × 100mm × 6mm)*

Model No.	Description	Working Width	Weight	HP (Min.)	RRP ex GST	RRP inc GST
CLR60-03	Compact Landscape Rake 1.5m Green	1.5m	65kg	15	AU$1,914	**AU$2,106**

FIELDQUIP
MEDIUM DUTY LANDSCAPE RAKE

Designed for 20–40HP tractors, this medium duty landscape rake is ideal for grading, levelling and debris removal across small farms, arenas and landscaping applications. The Category I quick hitch compatible A-frame ensures simple attachment, while multiple angle settings provide flexibility in operation.

KEY FEATURES:

- Suited for 20–40HP tractors
- Category I quick hitch compatible A-frame
- 5 forward angles and 3 reverse angles
- 2-hole, heat treated high carbon spring steel tines *(8mm × 25mm)*
- Reinforced rake frame *(100mm × 100mm × 6mm)*

Model No.	Description	Weight	HP (Min.)	RRP ex GST	RRP inc GST
LLR72-03	Medium Duty Landscape Rake 1.8m Green	94kg	20	AU$2,401	**AU$2,641**
LLR84-03	Medium Duty Landscape Rake 2.1m Green	102kg	20	AU$2,866	**AU$3,153**



Photos may contain optional extras. Prices and specifications may change without notice.

FIELDQUIP
BOX BLADES

Designed for 20–40HP tractors, the BBX Box Blade is a practical choice for property maintenance, driveway repairs and general levelling. Its simple, heavy-duty design delivers dependable performance and larger capacity for small tractor owners who need more capability without unnecessary complexity.

KEY FEATURES:

- CAT I quick hitch compatible
- Heavy duty bolt-on A-frame
- Scarifier tube *(100mm square × 8mm wall)*
- 16mm shanks with replaceable plough points
- Dual reversible and replaceable cutting edges *(10mm × 150mm)*





Model No.	Description	Working Width	Weight	HP (Min.)	RRP ex GST	RRP inc GST
BBX48-03	Box Blades 1.2m Green	1.2m	118kg	20	AU$1,692	**AU$1,861**
BBX60-03	Box Blades 1.5m Green	1.5m	148kg	20	AU$1,888	**AU$2,077**
BBX72-03	Box Blades 1.8m Green	1.8m	176kg	20	AU$2,147	**AU$2,362**

FIELDQUIP
FEL DOUBLE BALE SPEAR



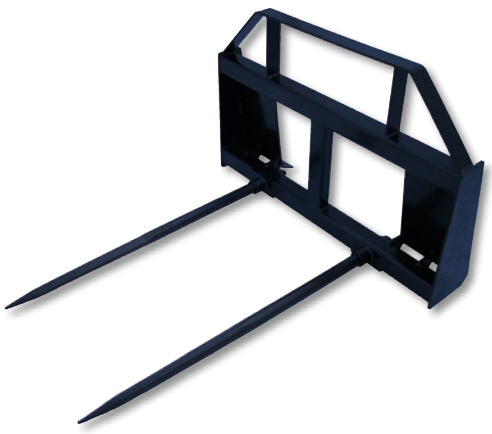

Model No.	Description	Capacity	Weight	RRP ex GST	RRP inc GST
BS2E	FEL Double Bale Spear Att. Euro	1,500 kg @ 600 mm	140 kg	AU$1,697	**AU$1,867**
BS2JD	FEL Double Bale Spear Att. John Deere	1,500 kg @ 600 mm	140 kg	AU$1,697	**AU$1,867**

Photos may contain optional extras. Prices and specifications may change without notice.

FIELDQUIP®
AG & TURF

TERMS & CONDITIONS...

1. All prices and specifications are subject to renewal or alteration without prior notification. Dealers must check prices to satisfy themselves before quoting.
2. Prices are in Australian dollars with both GST inclusive and exclusive.
3. Prices exclude freight except where stated otherwise.
4. It is the dealer's responsibility to check availability of stock before quoting any model or machine for resale.
5. Specifications contained in this pricelist are only an outline. Please consult model specific brochures for complete specifications.
6. Exclusive Dealer Marketing Rights may apply to some products in some areas. It is the dealer's responsibility to check this before quoting any goods for resale.
7. Fieldquip reserves the right not to sell any or all the items included in this pricelist to any potential Purchaser or Reseller.

WARRANTY TERMS

1. All Fieldquip machinery is covered by a comprehensive warranty against faulty materials and workmanship provided that:
    i. The machine is operated in normal use,
    ii. The machine is correctly services and maintained,
    iii. The machine is worked within its stated capacity (ie. horsepower limit and PTO speed),
    iv. The machine is not subjected to any modifications or damage from improper use
    v. Fieldquip is in receipt of duly signed pre-delivery and installation certificate and warranty documentation.
2. The term of warranty shall be 12 months from date of installation except machines sold into the Hire Industry, these shall be void of warranty.
3. The following items are not covered by Fieldquip warranty;
    i. Power take-off shafts and clutches,
    ii. Blades, tynes, flails, knives, tyres, wheels, belts, bearings, seals etc,
    iii. Freight costs;
    iv. Loss of income from the machine due to a warranty fault,
    v. Use of non genuine parts.
4. Fieldquip will not cover any repairs performed without Fieldquip personnel prior agreement.

WARRANTY PROCEDURE

In the event of a product failure please proceed as follows:

5. Phone Fieldquip (07) 4691 1500 and discuss the problem with the customer service team. They will advise how to carry out the repair in the quickest, most effective and efficient way.
6. Advise Fieldquip during this phone call what labour would be involved in the repair work. Fieldquip will authorise the pre-allocated labour allowance for the repair and issue a warranty claim number. No repair is to be commenced without prior authorisation.
7. Fieldquip will post out a warranty claim form. This will specify the allowed labour rate, time allocation and parts to be returned for warranty assessment.
8. Fieldquip will dispatch if needed any parts to carry out the repair work and will invoice and charge the dealer. The faulty parts must be returned for a credit to be raised.
9. Fill out the required forms and return (with faulty parts).
10. Once parts and claim forms are received, parts will be assessed and if the claim is accepted, it will be credited to your account.
11. Claims must be returned within 20 days from date of repair.

NOTE: All photos are for Illustration Purposes only and may be a different model to description.

FIELDQUIP®
AG & TURF



PHONE: 1800 454 150

199 BRIDGE STREET OAKEY QUEENSLAND AUSTRALIA 4401

www.fieldquip.com.au

Additional lines may be added or deleted from the range in this guide -
visit **www.fieldquip.com.au** for new models and availability

MEMBER OF THE ALAMO GROUP

ALWAYS ON THE CUTTING EDGE